SEAHORSE PROTECTIVE EQUIPMENT CASES 710

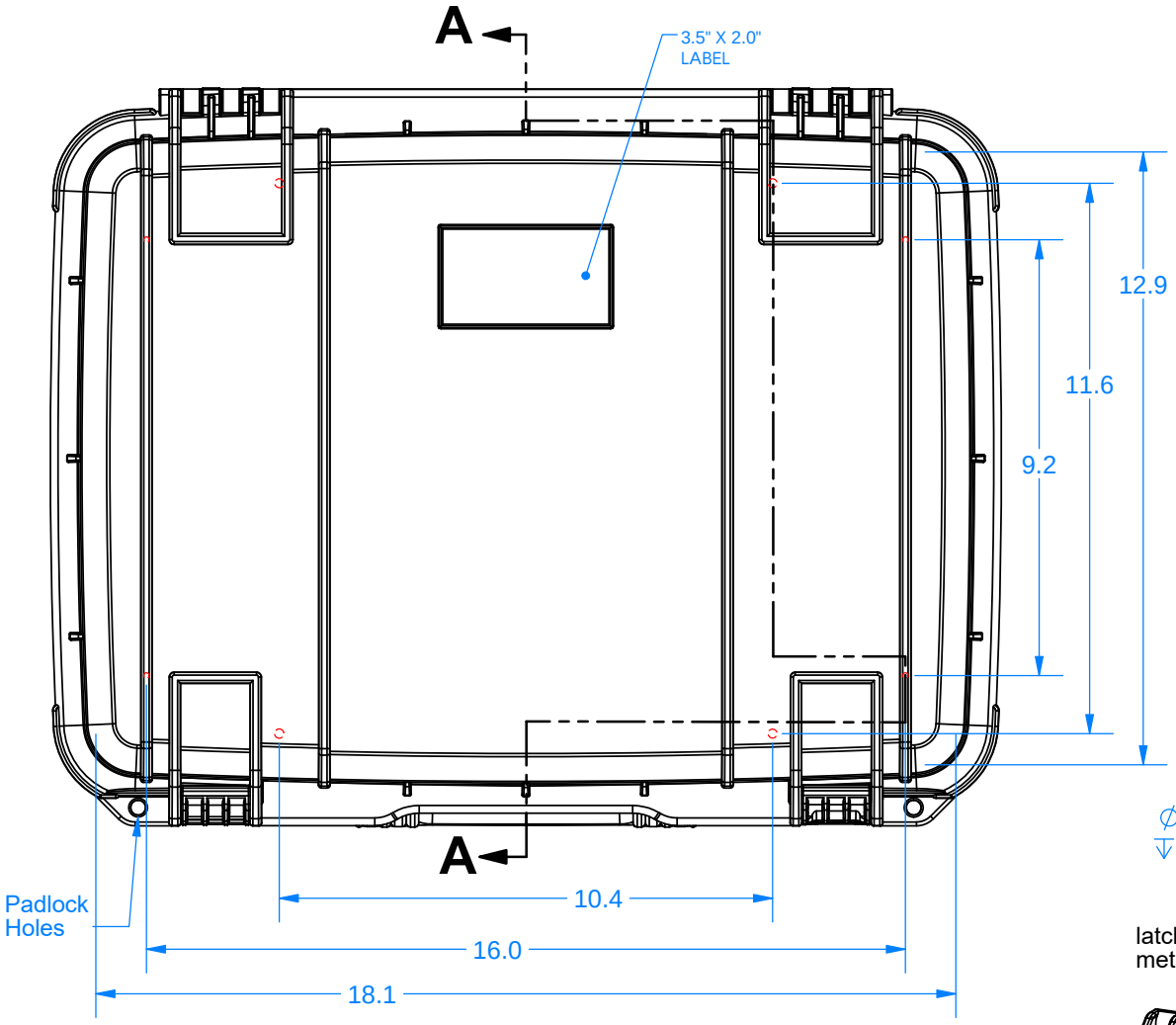

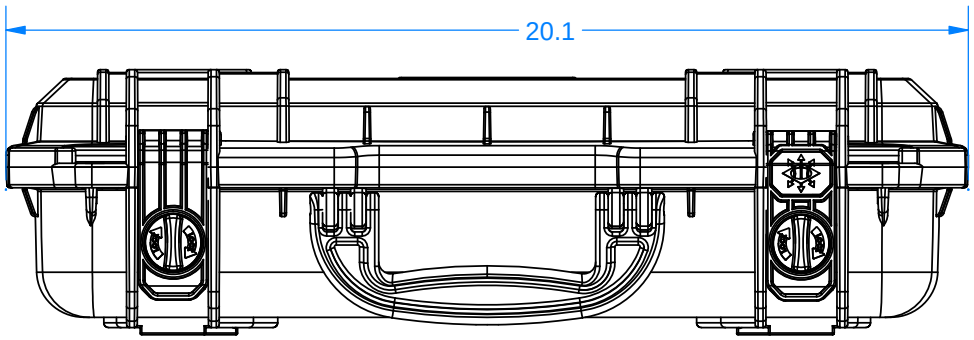

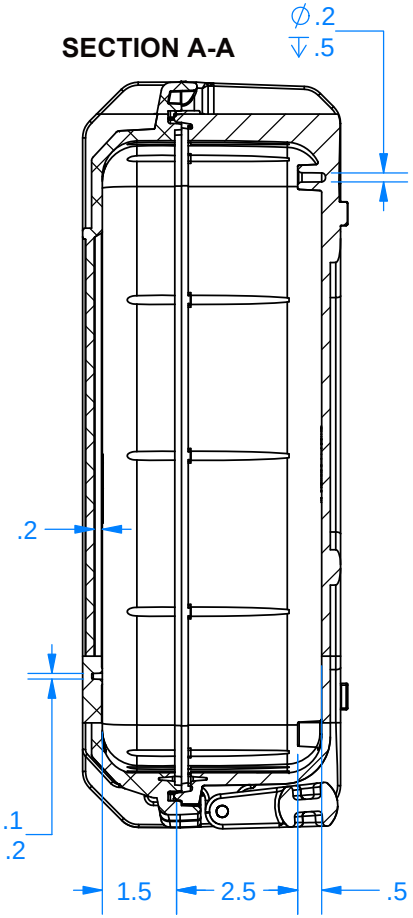

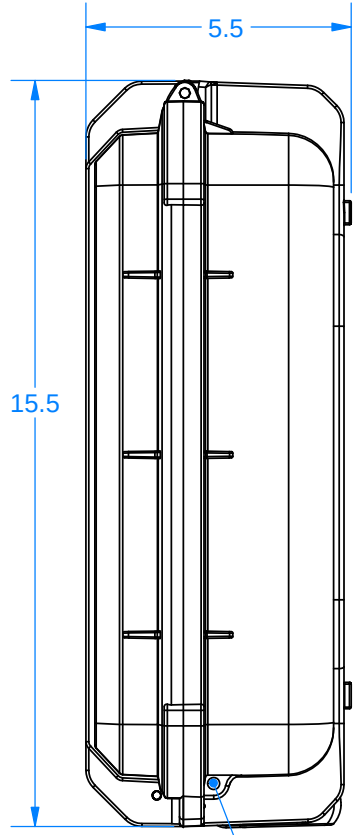

latch with metal lock

latch with plastic lock

Holes for shoulder strap.
PN 8704 (not included)

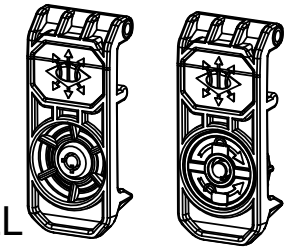

Optional latches may be specified at time of order. See note 2

NOTES:

1) Max. usable inside dimensions are:
18 5/16" X 13 3/16" X 4 1/16"
(4 9/16" bottom of boss) (18.3" X 13.2" X 4.1")

2) Case part numbers with Optional Latches:
Metal Lock Latches p/n 710ML
Plastic Lock Latches p/n 710PL

6/4/18

2009 Wright Ave. La Verne, CA 91750
Ph. (626) 339-6673 Fx. (626) 331-8584 www.seahorse.com