DC POWER SUPPLY

GPS-S SERIES

(DOUBLE DIGITAL)

USER MANUAL

GW INSTEK PART NO.82PS-303DDMD1

ISO-9001 CERTIFIED MANUFACTURER

GW INSTEK

SAFETY TERMS AND SYMBOLS

These terms may appear in this manual or on the product:

WARNING. Warning statements identify conditions or practices that could result in injury or loss of life.

CAUTION. Caution statements identify conditions or practices that could result in damage to this product or other property.

The following symbols may appear in this manual or on the product:

DANGER High Voltage	DANGER Hot Surface	ATTENTION refer to Manual	Protective Conductor Terminal	Earth (ground) Terminal

EC Declaration of Conformity

We

GOOD WILL INSTRUMENT CO., LTD.

No.7-1, Jhongsing Rd, Tucheng City, Taipei County 236, Taiwan

GOOD WILL INSTRUMENT (SUZHOU) CO., LTD.

No.69 Lushan Road, Suzhou New District Jiangsu, China.

GPS-3030DD, GPS-1830DD

are herewith confirmed to comply with the requirements set out in the Council Directive on the Approximation of the Law of Member States relating to Electromagnetic Compatibility (89/336/EEC,92/31/EEC,93/68/EEC) and Low Voltage Equipment Directive (73/23/EEC).

For the evaluation regarding the Electromagnetic Compatibility and Low Voltage Equipment Directive, the following standards were applied:

EN 61326-1: Electrical equipment for measurement, control and laboratory use—EMC requirements (1997+A1:1998)					
Conducted Emission	EN 55022 class B	(1994)	Electrostatic Discharge	IEC 1000-4-2	(1995)
Radiated Emission	EN 55011 class B	(1991)	Radiated Immunity	IEC 1000-4-3	(1995)
Current Harmonics	EN 61000-3-2	(1995)	Electrical Fast Transients	IEC 1000-4-4	(1995)
Voltage Fluctuations	EN 61000-3-3	(1995)	Surge Immunity	IEC 1000-4-5	(1995)
----------	----------	----------	Conducted Susceptibility	EN 61000-4-6	(1996)
----------	----------	----------	Power Frequency Magnetic field	EN 61000-4-8	(1993)
----------	----------	----------	Voltage Dip/Interruption	EN 61000-4-11	(1994)

Low Voltage Equipment Directive 73/23/EEC	
Low Voltage Directive	EN 61010-1:(1993)+A2:(1995)

FOR UNITED KINGDOM ONLY

NOTE

This lead/appliance must only be wired by competent persons

WARNING

THIS APPLIANCE MUST BE EARTHED

IMPORTANT

The wires in this lead are coloured in accordance with the following code:

Green/ Yellow:	Earth
Blue:	Neutral
Brown:	Live(Phase)

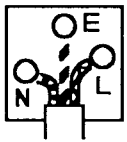

As the colours of the wires in main leads may not correspond with the colours marking identified in your plug/appliance, proceed as follows:

The wire which is coloured Green & Yellow must be connected to the Earth terminal marked with the letter E or by the earth symbol ⏚ or coloured Green or Green & Yellow.

The wire which is coloured Blue must be connected to the terminal which is marked with the letter N or coloured Blue or Black.

The wire which is coloured Brown must be connected to the terminal marked with the letter L or P or coloured Brown or Red.

If in doubt, consult the instructions provided with the equipment or contact the supplier.

This cable/appliance should be protected by a suitably rated and approved HBC mains fuse : refer to the rating information on the equipment and/or user instructions for details. As a guide, cable of 0.75mm ^{2} should be protected by a 3A or 5A fuse. Larger conductors would normally require 13A types, depending on the connection method used.

Any moulded mains connector that requires removal/replacement must be destroyed by removal of any fuse & fuse carrier and disposed of immediately, as a plug with bared wires is hazardous if engaged in a live socket. Any re-wiring must be carried out in accordance with the information detailed on this label.

CONTENTS

SECTION		PAGE
1.	**INTRODUCTION**	1
2.	**SPECIFICATIONS**	2
2-1	General	2
2-2	Constant Voltage Operation	3
2-3	Constant Current Operation	3
2-4	Indicator Meter	3
2-5	Insulation	4
3.	**THEORY OF OPERATION**	4
4.	**PANEL CONTROLS AND INDICATORS**	6
4-1	Front Panel	6
4-2	Rear Panel	6
5.	**OPERATION INSTRUCTIONS**	9
5-1	Precaution	9
5-2	Setting Current Limit	9
5-3	Constant Voltage/Constant Current Characteristic	9
5-4	Operation Mode	11
6.	**MAINTENANCE**	17
6-1	Fuse Replacement	17
6-2	Line Voltage Conversion	17
6-3	Adjustments	17
6-4	Cleaning	18

1. INTRODUCTION

The regulated DC power supply have been designed to provide the most often required in the laboratory, schools and production lines.

The output voltage is continuously adjustable between 0 to rating voltage in one range by means of a coarse and fine potentiometer, the load current may have any value from 0 to rating current and adjusted by means of a coarse and fine potentiometer. Both outputs can accurately read on voltmeter and ammeter.

Both stability and ripple are extremely good to meet the requirements of modern circuit design. The unit can be used as either constant voltage or current source. The various operation mode are described in more detail in the Operation Instruction section.

For applications when output greater than V or A is need, the unit can be connected up in series or parallel.

For applications in audio production lines, the continuous or dynamic load internal selectable.

2. SPECIFICATIONS

2-1 General

Main supply 100V/120V/220V/240V ±10% 50/60 Hz (Switch selectable)

Rating, dimension and weight see Table 2-1.

Table 2-1

MODEL	Display Type	Max. Rating		Dimensions	Weight
		Volts (V)	Amps (A)	WxHxD (m/m)	Kg
GPS-1830DD	Double Digital	18	3	128(W) 145(H) 285(D)	4.0
GPS-3030DD	Double Digital	30	3		5.0

Dimensions : 128(W) x 145 (H) x 285 (D) mm

⚠ WARNING. Voltages more than 60V DC are a lethal shock hazard to the user. Be careful when connecting power supplies in series to achieve voltages higher than 60V DC total or 60V DC between any connection and earth ground.

Operation mode Single or Tracking (Series or Parallel) operation (two units).

Operation Environment : Indoor use
Altitude up to 2000 m
Installation Category II
Pollution degree 2

Operation Temperature & Humidity	0°C to 40°C, <80%
Storage Temperature & Humidity	−10°C to 70°C, <70%
Accessories	
	Test lead (current <4A) 1
	(4A≤current≤10A)
	Operation Manual 1

2-2 Constant Voltage Operation

(1) Output voltage ranges 0 to rating voltage continuously adjustable.
(2) Voltage regulation
line regulation≤0.01%+3mV.
load regulation≤0.01%+3mV (rating current≤3A).
load regulation≤0.01%+5mV (rating current>3A).
(3) Recovery time≤100μs (50% Load change, minimum load 0.5A)
(4) Ripple & Noise ≤0.5mVrms (5Hz~1MHz) (rating current≤3A).
Ripple & Noise ≤1.0mVrms (5Hz~1MHz) (rating current>3A).
(5) Temperature coefficient≤300PPM/°C.

2-3 Constant Current Operation

(1) Output current range 0 to rating current continuously adjustable.
(2) Current regulation
line regulation≤0.2%+3mA.
load regulation≤0.2%+3mA.
(3) Ripple & Noise≤3mArms.

2-4 Indicator Meter

Display : 3 1/2 Digits 0.39" Red LED and Green LED DISPLAY.
Accuracy: ±(0.5% of rdg + 2 digits).

Voltage range: 19.99V of full scale (rating voltage≤18V).
199.9V of full scale (rating voltage≥20V).
Current range: 1.999A of full scale (rating current<2A).
19.99A of full scale (rating current≥2A).

2-5 Insulation

Between chassis and output terminal.
20MΩ or above (DC500V).
Between chassis and AC cord.
30MΩ or above (DC500V).

3. THEORY OF OPERATION

The power supply consists of an AC input circuit and transformer, a bias supply consisting of a rectifier and filter and reference voltage source, a main regulator circuit consisting of the main rectifier and filter, a series regulator, a current comparator, a voltage comparator, a reference voltage amplifier, a remote control and a relay control circuit.

The circuit element are several of integrated circuit (U101, U102, U103, U104, U105, U106).

The circuit arrangement is shown in block diagram from Fig. 1.

The circuit is discussed with reference to the block diagram Function Description.

Single phase input power is applied to transformer through the input circuit.

Auxiliary rectifier D1021-D1024 provides a bias voltage filtered by capacitor C103, C104 for the preregulator U101, Q105, Q106, that provides a regulator voltage for element of action.

The main rectifier, a full wave bridge rectifier, provides the power which is filtered by capacitor C101 and then regulated via a series regulator and deliver to the output.

U105 acted as a current limiter. When current is over predominante rating, it acted and decreased the current U102 provides a reference voltage for U103A, U103B, U103 is a invertor amplifier, U105 is a current comparator. Both via OR gate and driver amplifier to series control Q101, Q102.

The relay control circuit provides limited power dissipation is series regulator.

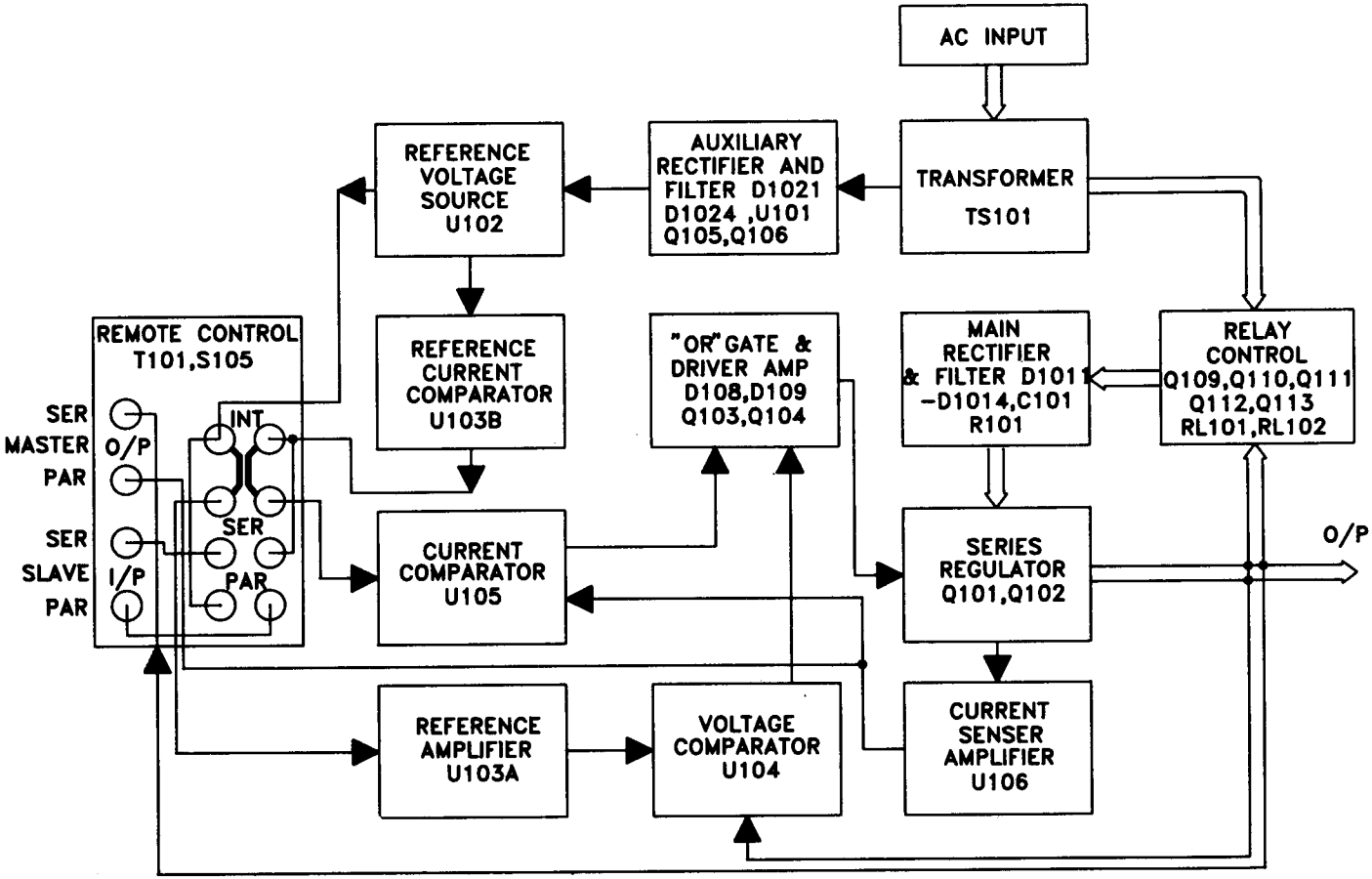

Fig. 1 Block Diagram

4. PANEL CONTROLS AND INDICATORS

4-1 Front panel

①	CV indicator	lights when the power turn on and constant voltage operation.
②	CC indicator	lights when this unit in constant current operation.
③	Voltage coarse	for the coarse adjustment of the output voltage.
④	Voltage fine	for the fine adjustment of the output voltage.
⑤	Current coarse	for the coarse adjustment of the output current.
⑥	Current fine	for the fine adjustment of the output current.
⑦	"+" output terminal	positive polarity (Red).
⑧	"GND" terminal	earth and chassis ground (Green).
⑨	"−" output terminal	negative polarity (Black).
⑩	meter	Indicates the output voltage.
⑪	meter	Indicates the output current.
⑫	A/V selects switch	selects the meter indicates of the output voltage or current (Digital type).
⑬	Power control	on/off switch.
⑭	Current HI/LO control	current indicates HI/LO range SELECTS.

4-2 Rear panel

⑮	Fuse holder	
⑯	Power cord	
⑰	AC selects switch	With ⑱ switch selects the line voltage at the high end (Right position) of the range 120V or 240V and at the low end (left position) of the range 100V or 220V.
⑱	AC selects switch	Selects the line Voltage is in the 100V-120V range (left position) or is in the 220V-240V range (Right position).
⑲	Master-Slave Switch	Selects for Master (internal control) or Slave (external remote control) tracking operation.
⑳	Input-Output connector	With ⑲ Master-Slave switch selects, permit from the Master unit (SER. or PAR.) output connected to Slave unit (SER. or PAR.) inputs.

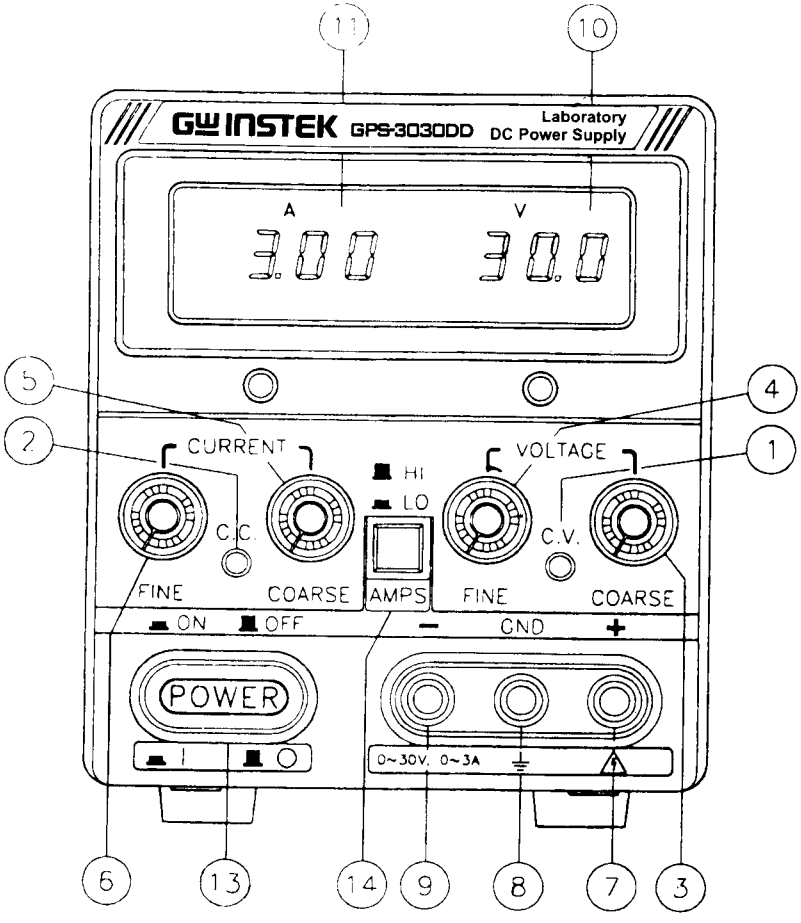

Fig. 4-1 Front Panel

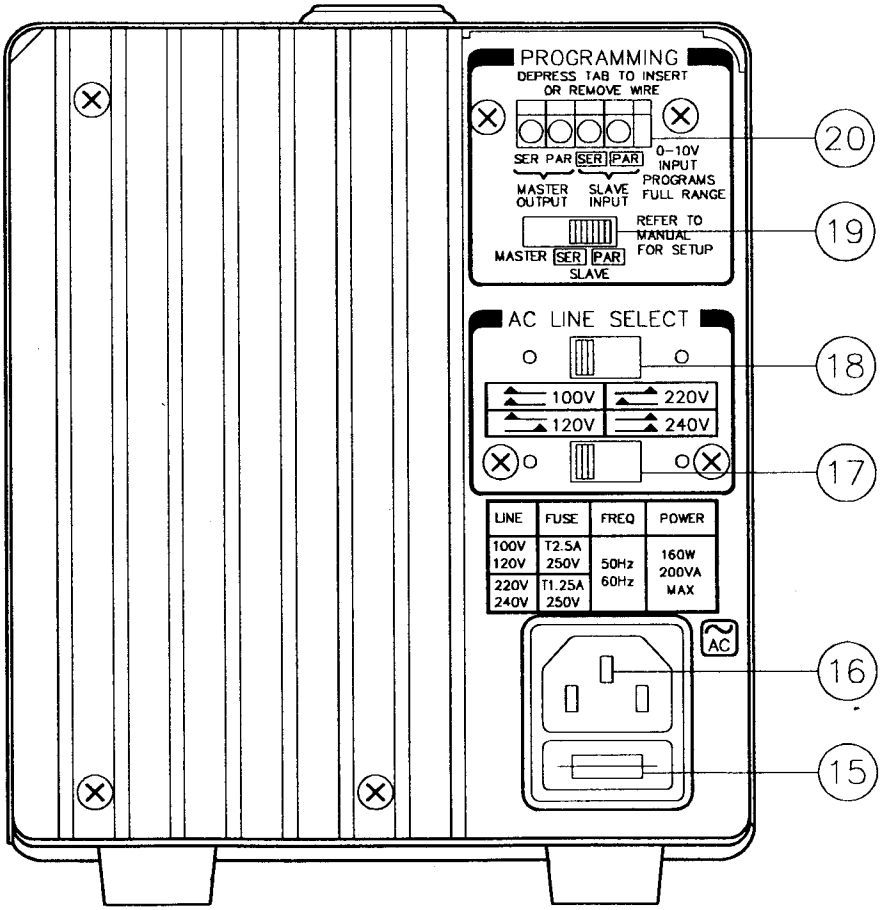

FIG. 4-3 REAR PANEL

5. OPERATION INSTRUCTIONS

5-1 Precaution

(1) AC input

AC input should be within the range of line voltage±10% 50/60Hz

⚠ WARNING. To avoid electrical shock, the power cord protective grounding conductor must be connected to ground.

(2) Installation

Avoid using the supply in a place where ambient temperature exceeds 40°C. The heat sink located at rear of the supply must have sufficient air space for radiation.

⚠ CAUTION. To avoid damaging the power supply, don't use it in a place where ambient temperature exceeds 40°C.

(3) Output voltage overshoot

Voltage between output terminals never exceeds the present value when the power is turned on or off.

5-2 Setting Current Limit

(1) Determine the maximum safe current for the device to be powered.
(2) Temporarily short the (+) and (−) terminals of the power supply together with a test lead.
(3) Rotate the COARSE VOLTAGE control away from zero sufficiently for the CC indicator to light.
(4) Adjust the CURRENT control for the desired current limit. Read the current value on the Ammeter.
(5) The current limit (overload protection) has now been preset. Do not change the CURRENT control setting after this step.
(6) Remove the short between the (+) and (−) terminals and hook up for constant voltage operation.

5-3 Constant Voltage/Constant Current Characteristic

The working characteristic of this series Power Supplies is called a constant voltage/constant current automatic crossover type. This permits continuous transition from constant current to constant voltage modes in response to the load change. The intersection of constant voltage and constant current modes is called the crossover point. Fig. 5-1 shows the relationship between this crossover point and the load.

For example, if the load is such that the power supply is operating in the constant voltage mode, a regulated output voltage is provided. The output voltage remains constant as the load increases, up until the point where the preset current limit is reached. At that point, the output current becomes constant and the output voltage drops is proportion to further increases in load. The crossover point is indicated by the front panel LED indicators. The crossover point is reached when the CV indicator goes off and the CC indicator comes on.

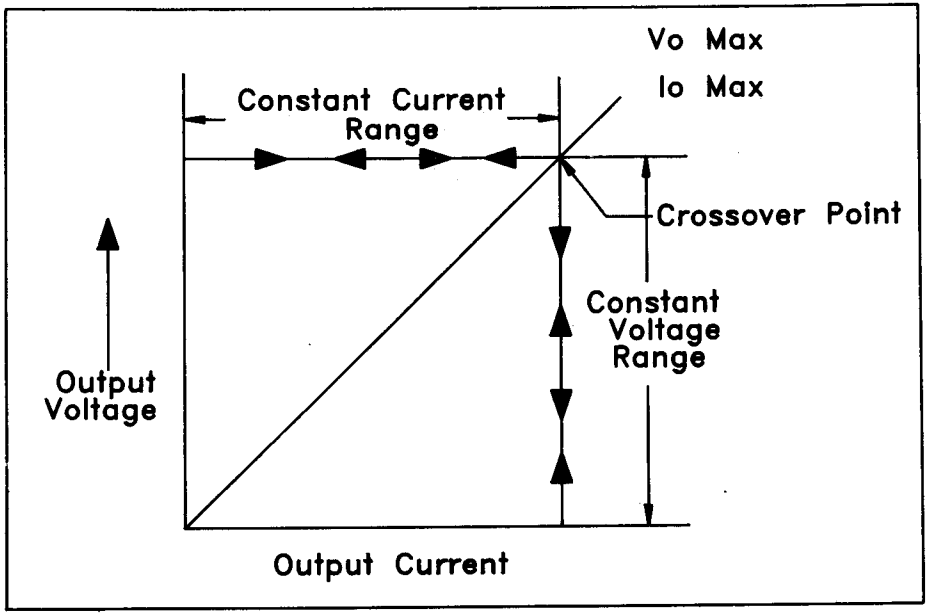

Fig. 5-1 Constant Voltage/Constant Current Characteristic.

Similarly, crossover from the constant current to the constant voltage mode automatically occurs from a decrease in load. A good example of this would be seen when charging a 12-volt battery. Initially, the open circuit voltage of the power supply may be preset for 13.8 volts. A low battery will place a heavy load on the supply and it will operate in the constant current mode, which may be adjusted for a 1 amp charging rate. As the battery becomes charged, and its voltage approaches 13.8 volts, its load decreases to the point where it no longer demands the full 1 amp charging rate. This is the crossover point where the power supply goes into the constant voltage mode.

5-4.Operation mode

(1) Single Operation

Use the supply as it is for single operation.

A. Set Power switch to "OFF" position.
B. Make sure that line voltage is correct for the input power voltage.
C. Plug power cord into the power outlet.
D. Set Power switch to "ON" position.
E. Adjust "Voltage" and "Current" control to the desired output voltage and current.
F. Connect the external load to the output binding posts. Make sure both "+" and "–" terminals are connected correctly.

(2) Series Operation(only applied to the same models)

Two power supplies can be connected in series to provide higher voltage and rating current output. See Fig. 5-2 for the connection scheme.

A. Set power switch to "OFF" position.
B. Set the "MASTER" power supply INT-SLAVE switch to "INT' position and set the "SLAVE" power supply INT-SLAVE switch to "SER-SLAVE" position.
C. Connect the "MASTER" power supply "SER" output terminal to "SLAVE" power supply "SER" input.
D. Connect Master "–" to Slave "+".
E. Connect Load to Master "+" and Slave "–".
F. Set power switch to "ON" position.

WARNING: Voltage more than 60V are a lethal shock hazard to the user. Be careful when connecting power supplies in series to achieve voltage higher than 60V DC total or 60V DC between any connection and earth ground.

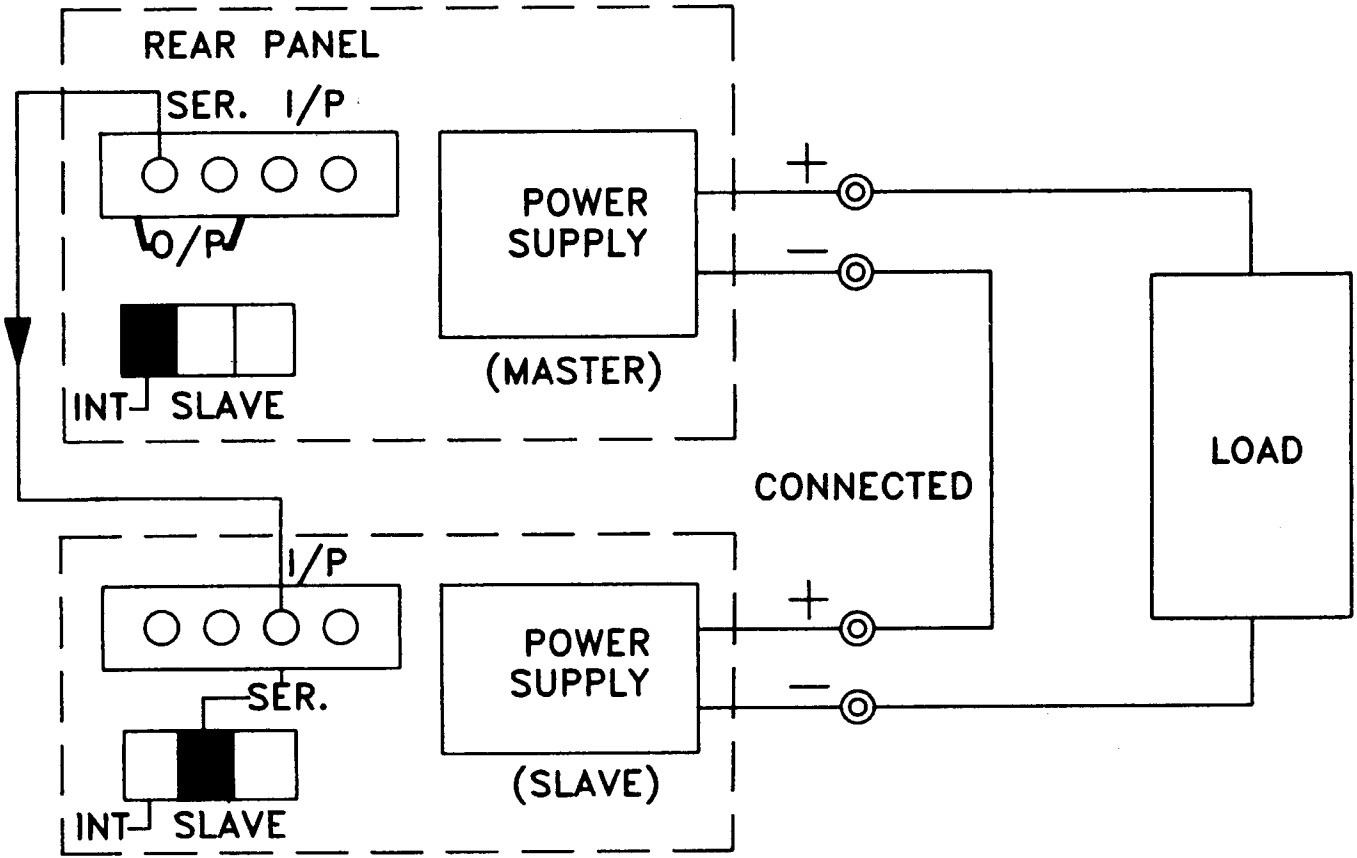

Fig.5-2 Connecting two Power supplies in Series

E. **Set the SLAVE VOLTAGE and CURRENT control to maximum output.**

F. **When connected in series, from the master VOLTAGE controls of each power supply exercise control over 0 to rating range. Add the two voltmeter readings together to determine the total output voltage, or an external voltmeter may be connect across the load.**

G. **Load current may be monitored from either supply; the reading will be identical since they are connected in series. Also, since the supplies are connected in series, it is only necessary to set the current limit of the master power supply; the slave would set for maximum.**

(3) Parallel Operation

Two power supplies may be connected in parallel to provide rating voltage and higher current output. See Fig. 5-3 for the connection scheme.

A. **Set power switch to "OFF" position.**

B. Set the "Master" power supply INT-SLAVE switch to "INT" position and set the "SLAVE" power supply INT-SLAVE switch to "PAR-SLAVE" position.

C. From the "MASTER" power supply "PAR" output terminal connected to "SLAVE" power supply "PAR" input.

D. When connected in parallel the VOLTAGE controls of each power supply exercise control over a 0 to rating range. Add the two ammeter readings together to determine the total output current or an external ammeter may be connected series the load.

E. **The output voltage may be monitored from either supply; the readings will be identical since they are connected in parallel. Also, since the supplies are connected in parallel, it is only necessary to set the current limit of the master power supply; the slave would set for maximum.**

F. **Set power switch to "ON" position.**

G. **Set the SLAVE VOLTAGE and CURRENT control to maximum output.**

H. **Set the MASTER output voltage lower than 0.2-0.5V of SLAVE output voltage, this point is very important.**

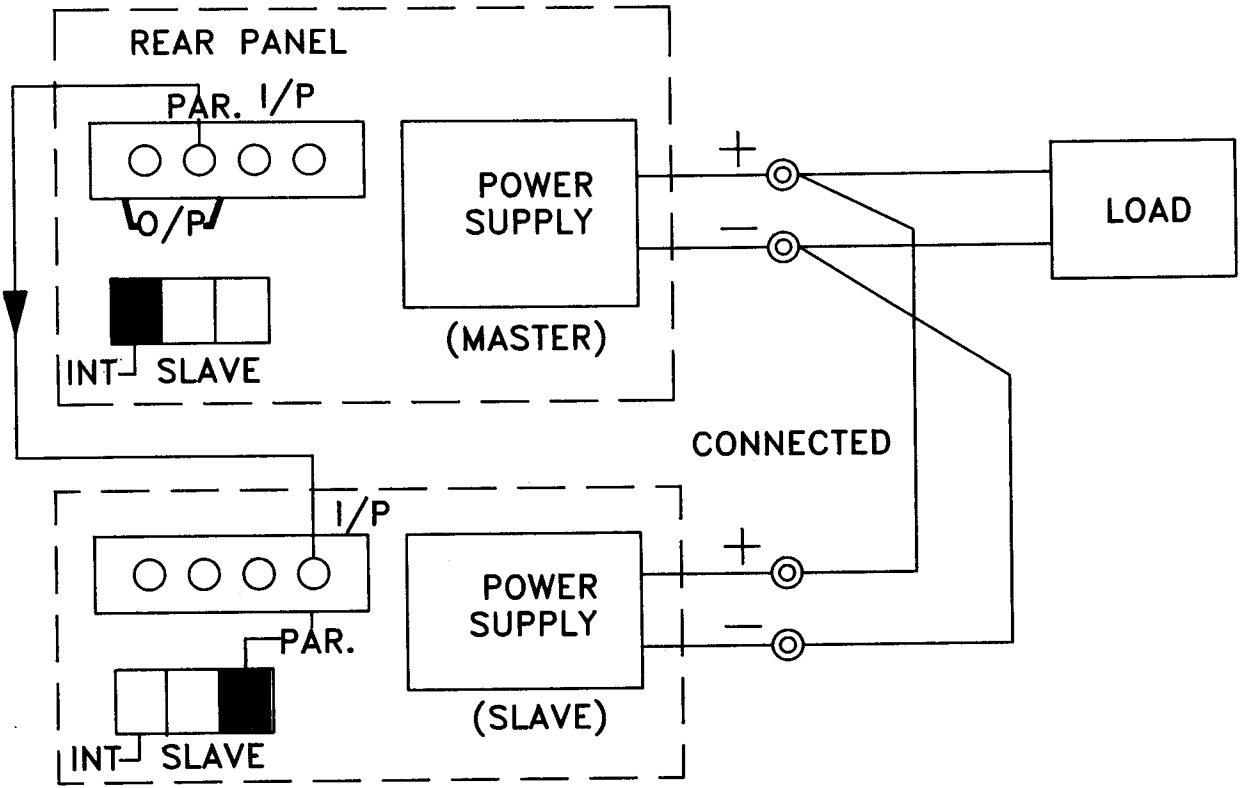

Fig. 5-3 Connecting Two Power Supplies in Parallel.

(4) Remote control of output voltage

The output voltage of the power supply can be remote-controlled with an external voltage, the connection scheme as follow, See Fig. 5-4.

Fig. 5-4

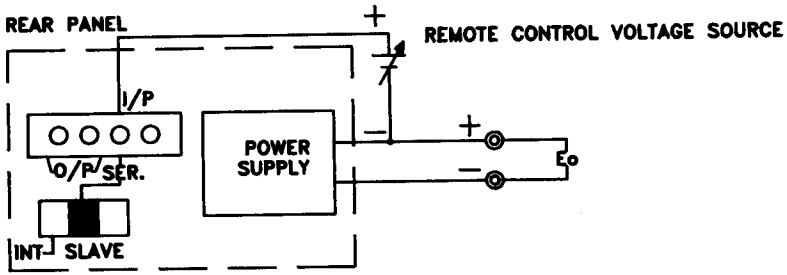

A. Set the power supply INT-SLAVE switch to "SER-SLAVE" position.

B. The "+" line of control voltage source is connected to the "SER" input terminal and the "−" line of control voltage source is connected to the power supply output "+" terminal.

C. The output voltage Eo calculate as follows formula:

$$Eo \doteq \frac{Er \times Ec}{10}$$

Eo: Output voltage of the power supply.

Er: Rated voltage of the power supply.

Ec: Remote control voltage.

$0 \leq Ec \leq$ approx. 10V

D. For the remote voltage source Ec, use a divice which provides a stable, low noise voltage source (a GOOD WILL GPR, GPC series power supply or an equivalent device).

(5) Remote control of output current

The output current of the power supply can be remote-controlled with an external voltage, the connection scheme as follow, See Fig. 5-5.

Fig. 5-5

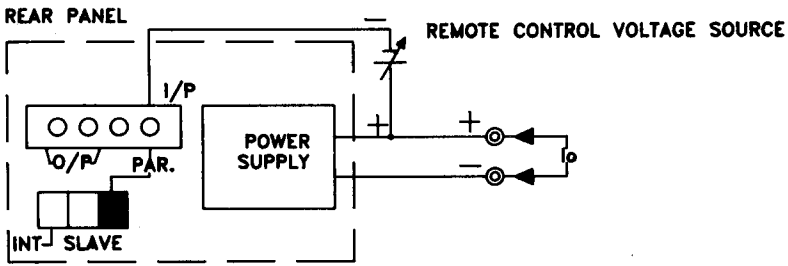

A. Set the power supply INT-SLAVE switch to "PAR-SLAVE" position.

B. The "−" line of control voltage source is connected to the "PAR" input terminal and the "+" line of control voltage source is connected to the power supply output "+" terminal.

C. The output current Io calculate as follows formula:

$$Io = \frac{Ir \times Ec}{10}$$

Io: Output current of the power supply.

Ir: Rated current of the power supply.

Ec: Remote control voltage.

$0 \leq Ec \leq$ approx. 10V

D. For the remote control voltage source Ec, use a device which provides a stable, low noise voltage source (a GOOD WILL GPR, GPC series power supply or an equivalent device).

6. MAINTENANCE

WARNING

The following instructions are for use by qualified personnel only. To avoid electrical shock, do not perform any servicing other than contained in the operating instructions unless you are qualified to do so.

6-1 Fuse Replacement

If the fuse blows, the CV or CC indicators will not light and the power supply will not operate. The fuse should not normally open unless a problem has developed in the unit. Try to determine and correct the cause of the blown fuse, then replace only with a fuse of the correct rating and type.

The fuse is located on the rear panel (see Fig. 4-3).

⚠ WARNING. For continued fire protection. Replace fuse only with 250V fuse of the specified type and rating. And disconnect the power cord before replacing fuse.

6-2 Line Voltage Conversion

The primary winding of the power transformer is tapped to permit operation from 100, 120, 220, or 240 VAC, 50/60 Hz line voltage. Conversion from one line voltage to another is done by change AC selects switch as shown in Fig. 4-3.

The rear panel identifies the line voltage to which the unit was factory setted. To convert to a different line voltage, perform the following procedure:

(1) Make sure the power cord is unplugged.
(2) Change the AC selects switch to the desired line voltage position.
(3) A change in line voltage may also require a corresponding change of fuse value. Install the correct fuse value as listed on rear panel.

6-3 Adjustments

This unit was accurately adjusted at the factory before shipment. Readjustment is recommended only if repairs have been made in a circuit affecting adjustment accuracy, or if you have a reason to believe the unit is out of adjustment. However, adjustments should be attempted only if a multimeter with an accuracy of ±0.1% dcv or better is available (GOOD WILL Model GDM-8035G or equivalent).

If readjustment is required, use the following procedure. Locations of the adjustments are shown in Fig. 6-1 and Fig. 6-2.

(1) Adjustment of the Rating Voltage

A. Connect an accurate (±0.1%) external multimeter to measure the dc voltage at output terminals of the power supply.
B. Set the COARSE and FINE VOLTAGE controls to minimum (fully counterclockwise).
C. Adjust trimmer pot VR106 for a reading of 0 volts on the multimeter.
D. Turn the COARSE and FINE VOLTAGE controls to maximum (fully clockwise).
E. Adjust trimmer pot VR105 for a reading of rate voltsx1.05 on the mulitimeter.
F. Set the COARSE and FINE VOLTAGE controls for a reading of rate volts on the multimeter.
G. Adjust trimmer pot VR301 (VR201 digital type) for a reading of rate volts on the voltmeter (Digital Panel meter, digital type) of the power supply.

(2) Adjustment of the Rating Current

A. Set the CURRENT control to minimum (fully counterclockwise).
B. Connect the external multimeter to measure DC current at the output terminals of the power supply.
C. Set the COARSE and FINE CURRENT controls to minimum (fully counterclockwise).
D. Adjust trimmer pot VR107 for reading of 0 amps on the multimeter.
E. Set the COARSE and FINE VOLTAGE controls to a centered position.
F. Setting and turn the COARSE and FINE CURRENT controls to maximum (fully clockwise).
G. Adjust trimmer pot VR108 for a reading of 1/2rate ampsx1.05 on the multimeter. (LO current)
H. Adjust trimmer pot VR109 for a reading of rate ampsx1.05 on the multimeter. (HI current)
I. Readjust the CURRENT control for a reading of rate amps on the multimeter.
J. Adjust trimmer pot VR1 for a reading of rate current on the voltmeter of the power supply.
K. Adjust trimmer pot VR110(LO), VR111(HI) to calibrate the Ammeter or Digital panel meter of the power supply for the same reading as the multimeter.

6-4 Cleaning

To cleaning the power supply, use a soft cloth dampend in a solution of mild detergent and water. Do not spray cleaner directly onto the instrument, since it may leak into the cabinet and cause damage.

Do not use chemicals containing benzine, benzene, toluene, xylene, acetone, or similar solvents.

Do not use abrasive cleaners on any portion of the power supply.

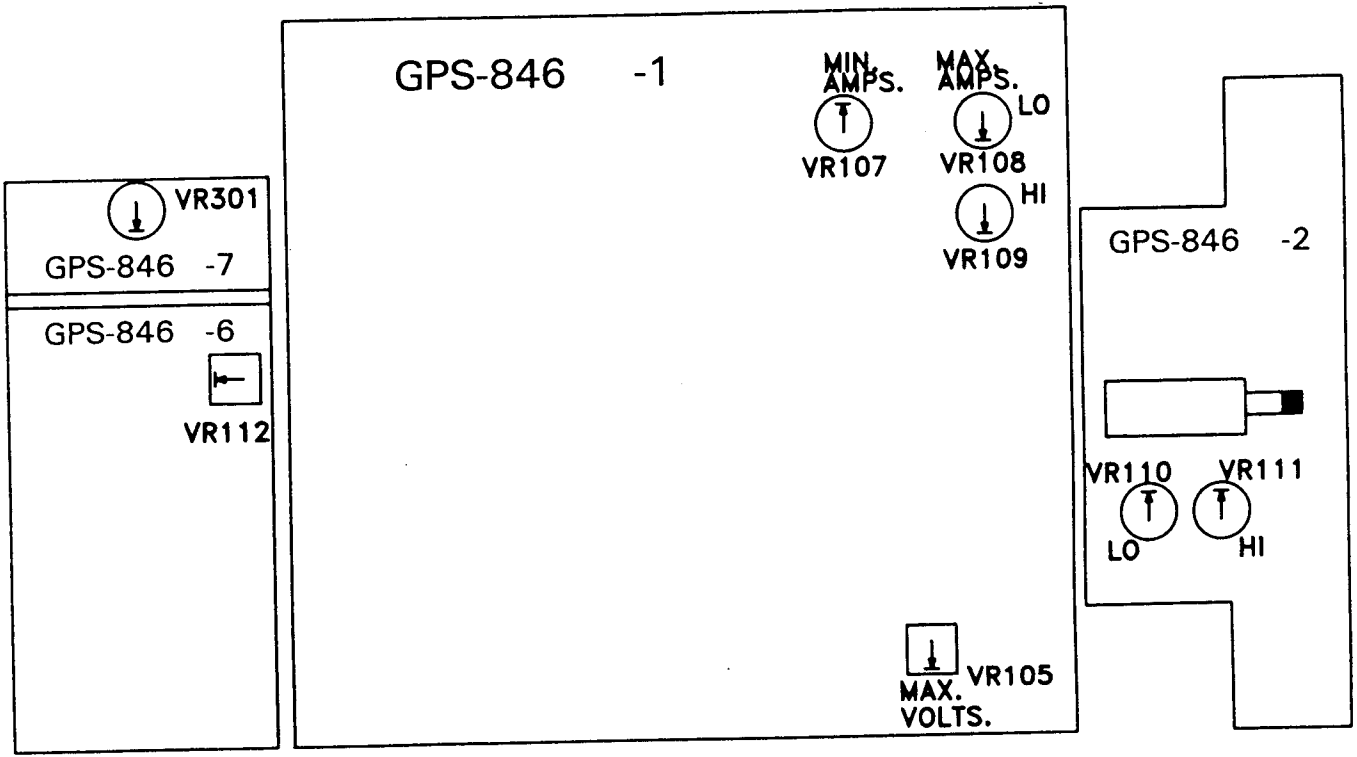

Fig. 6-1 Adjustment Location

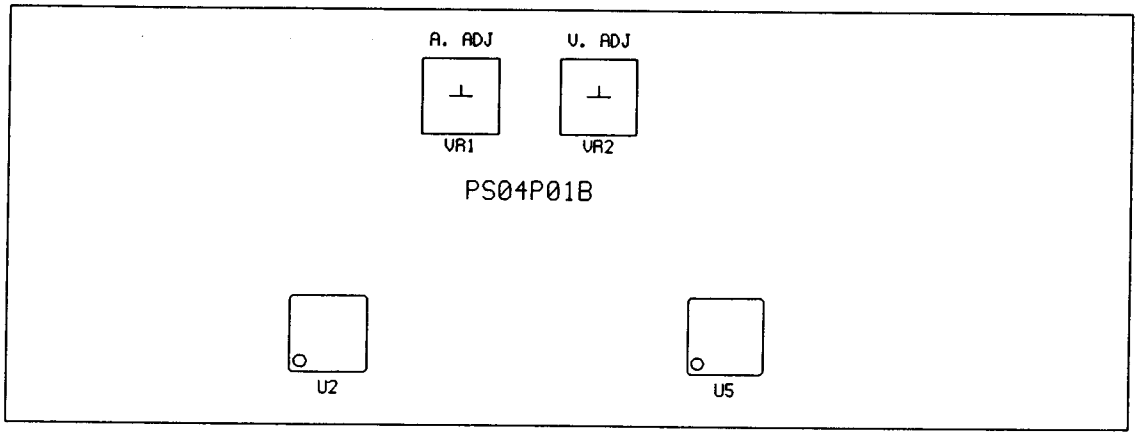

Fig. 6-2 Adjustment Location