GF Piping Systems

Instruction manual

2281 Conductive multipoint switch with dual channel relay

Georg Fischer Piping Systems Ltd CH-8201 Schaffhausen
Phone +41(0)52 631 30 26 / info.ps@georgfischer.com / www.gfps.com

GFDO 6354_4 (07.14)

Follow instruction manual

The instruction manual is part of the product and an important element within the safety concept.

- Read and follow instruction manual.
- Always keep instruction manual available for the product.
- Pass on instruction manual to all subsequent users of the product.

1. Intended use

The product is applicable for liquids with specific conductivity over 10 µS/cm. The switching unit can sense the resistance between probes. Conductivity measurement is suitable only for detecting the presence of liquid at a given level of the tank. This level is represented by the length of the probe. The conductive switch is suitable for filling or emptying control with 2 to 4 relay outputs working simultaneously or for level detection of 2-4 independent levels (in 1 or 2 tanks) with 2 independent relay outputs.

2. Safety and responsibility

In order to provide safety in the plant, the operator is responsible for the following measures:

- Products may only be used for its intended purpose, see intended use
- Never use a damaged or defective product.
  Immediately sort out damaged product.
- Make sure that the piping system has been installed professionally and serviced regularly.
- Products and equipment shall only be installed by persons who have the required training, knowledge or experience.
- Regularly train personnel in all relevant questions regarding locally applicable regulations, safety at work, environmental protection especially for pressurised pipes.

The personnel is responsible for the following measures:

- Know, understand and follow the instruction manual and the advices therein.

3. Function

The level switch consists of 1 or 2 switching unit and the KLN-2 type probes. Probes are to be connected to the 2281 type probe socket head that can be screwed into the tank. If the material of the tank or its internal insulation is not conductive then a reference probe should be used in addition to the one, two, three or four probe(s), if the material of the tank is conductive, the tank can be used as a reference probe.

4. Technical Data

4.1 Technical Data of the switching unit

Probe Voltage	5 V AC
Probe current	‹ 1 mA AC
Sensitivity	Adjustable: 5 kΩ ... 100 kΩ
Max. cable capacity	4 nF
Response	max. 400 ms
Setting accuracy (mech.)	± 5 %
Delay	Adjustable: 0.5 ... 10 s
Relay output	2x SPDT
Switching voltage	250 V AC1, 24 V DC
Switching current	16A AC1
Switching power	4000 vA AC1. 384 W DC
Electrical strength	4 kV
Mechanical life-span	3 x10^7 switches
Electrical life-span	0,7x10^5 switches
Power supply Un	24 V AC/DC
Voltage range allowed	nominal voltage -15 %...+100 %
Power consumption	max. 2.5 VA/ W
Ambient temperature	-20°C ... +55°C
Electrical connection	max. 2.5 mm² / with insulation 1.5 mm²
Electrical protection	Class III
Ingress protection	IP 20
Mechanical connection	DIN EN 60715 rail
Mass	240 g

5. Dimensions

Switching unit: 2281-2-Relay

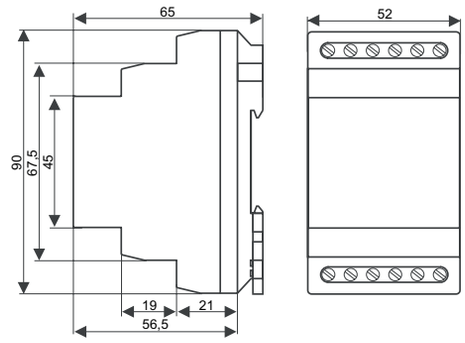

Separatur KLP-201

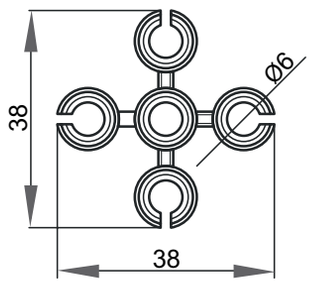

Probe KN-2xx

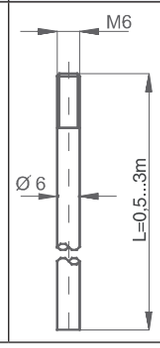

6. Installation

- Mount switching unit on DIN EN 60715 rail.
- Cut the KLN-2 type probes to the length required for level detection on site.
- Screw probes into the sockets.
- Tighten the probe with an M6 nut.
- Use separators at every 0.5 m for multiple probe devices to keep the probes apart.

7. Electrical Connection

If the wall of the tank is conductive no reference probe is needed, In this case terminal C is to be connected to the tank. On multiple probe units E1 and E2 are marked with 1,,.4, the reference probe is marked with C. Admissible length of cable between signal processor and probes depends on cable capacity and conductivity. Make sure E1 in upper level, E2 buttom level.

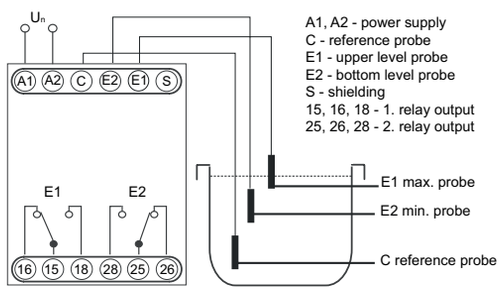

8. Putting into operation

8.1 Adjustment

The green LED (**U_n**) shows that the unit is on, the energized state of the relays are indicated by the E1 respectively E2 LEDs. Operating mode, delay ON and delay OFF can be set with the DIP switch on the front panel. tE1(s) and tE2(s) potentiometers are for adjusting the delay time. The sensitivity setting (R potentiometer) should comply with lhe conductivity of the fluid. Do not set sensitivity higher than required because the vapour precipitation may lead to operation disturbance.

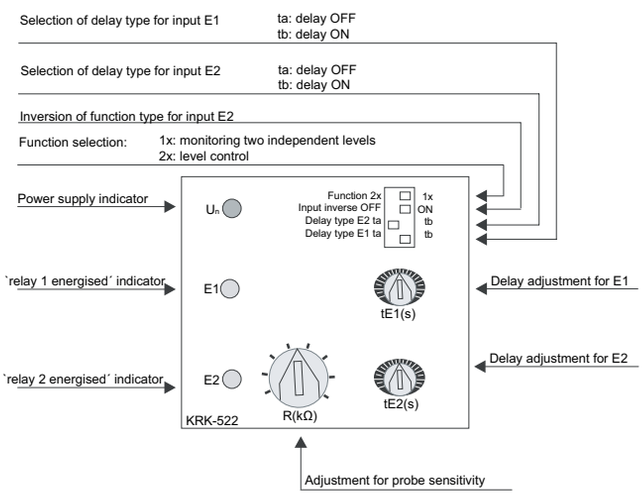

Georg Fischer Piping Systems Ltd CH-8201 Schaffhausen
Phone +41(0)52 631 30 26 / info.ps@georgfischer.com /
www.gfps.com

GFDO 6354_4 (07.14)

+GF+

8.2 Level detection

The relay allows level detection of 2 independent levels even in one tank or in two separated tanks.

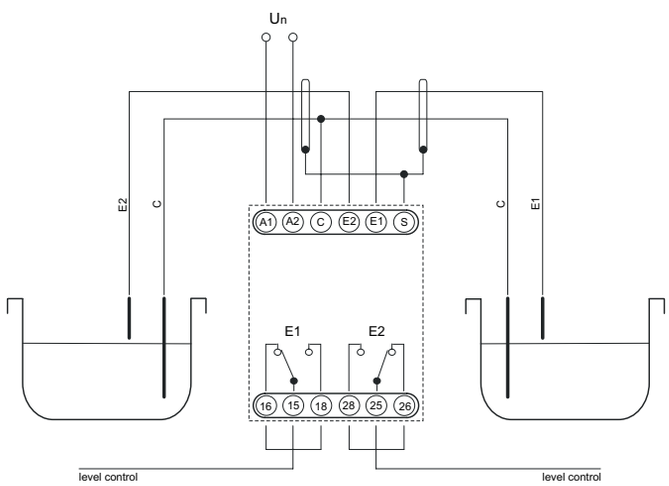

8.3 State of relays

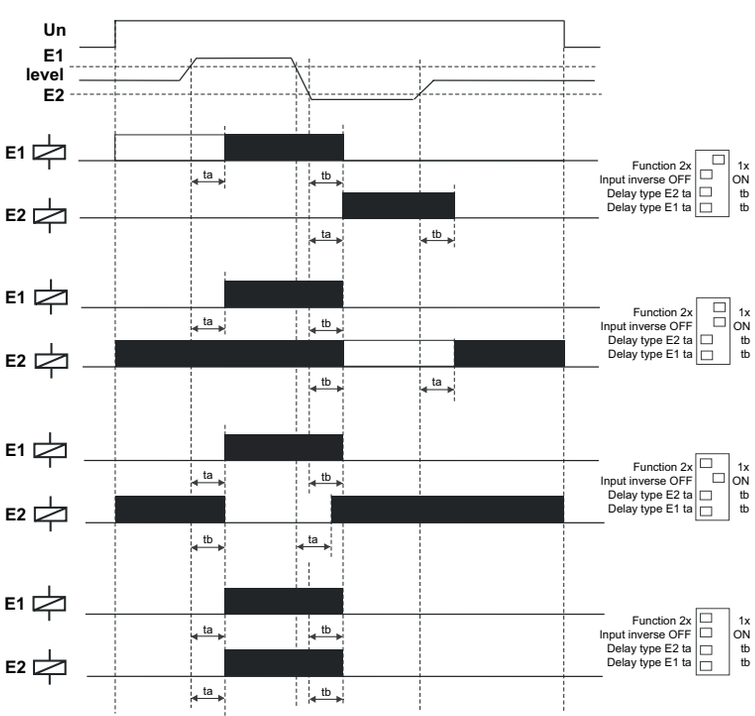

8.4 Level control

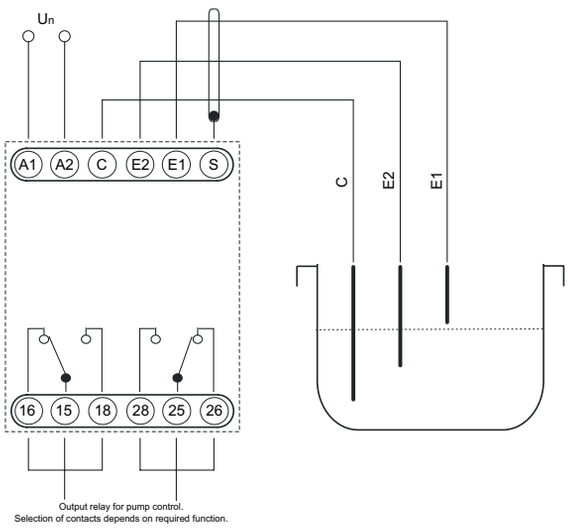

9. Maintenance, Repair

The device does not require regular maintenance. Repair within and beyond the wananty period is carried out at the manufacturer's location.

10. Storage

- Ambient temperature: -30 to +70 °C
- Relative humidity: max. 85%

11. Disclaimer

The technical data are not binding. They neither constitute expressly warranted characteristics nor guaranteed properties nor a guaranteed durability.
They are subject to modification. Our General Terms of Sale apply.