AC Current Probe
Model SR634

The Model SR634 is designed for use in industrial and utility environments. The unique ergonomic design allows it to easily clamp onto cables or small bus bars. It is built to the highest safety and performance standards including the CE Mark and is UL approved for Canada and United States.

Excellent transformation and low phase shift, plus a broad frequency response, permit accurate measurements of current for power and power quality measurements. The high quality magnetic cores and uniform windings provide sensitivity for very low level current measurements, as well as measurements up to 1200AAC. The Model SR634 works as a traditional current transformer (with ratios of 250:5, 500:5 or 1000:5) and provides current outputs in mA/A for use on DMMs, power and harmonic meters, data loggers, recorders or instruments with current ranges.

Features

- Measurement range of 100mA to 1200AAC
- Large jaw opening accommodates conductors up to two 500MCM conductors
- Ergonomic design and easy operation
- Conforms to EN 61010, 600V Cat. III safety standard
- Low phase shift for power measurements
- Available with mA output signals
- Designed for DMMs, recorders, loggers, oscilloscopes, power and harmonic meters
- UL approved for Canada and United States
- Double Insulation
- CE Mark

Applications

- Power quality measuring
- Low industrial loads
- Measuring around cable bundles
- Power load monitoring
- Waveform analysis

Specifications

MODEL	SR634*
ELECTRICAL	
Nominal Range	250, 500, 1000A
Measurement Range	0.1 to 1200A
Transformation Ratio	250:5, 500:5, 1000:5
Output Signal	5mA, 10mA, 20mAAC/AAC (5AAC @ 250, 500 or 1000A)
Accuracy (250A Range) 1 to 5A	≤10% ± 0.1A
5A	10% of Reading
12.5A	5% of Reading
50A	2.5% of Reading
250A	2% of Reading
300A	2% of Reading
Phase Shift (250A Range) 12.5A	10°
50A	10°
250A	10°
300A	10°
Accuracy (500A Range) 1 to 10A	≤6% ± 0.1A
10A	6% of Reading
25A	3% of Reading
100A	2% of Reading
500A	1% of Reading
600A	1% of Reading
Phase Shift (500A Range) 10A	6°
25A	4°
100A	3°
500A	2.5°
600A	2.5°
Accuracy (1000A Range) 1 to 20A	≤6% ± 0.1A
20A	5% of Reading
50A	3% of Reading
200A	1.5% of Reading
1000A	1% of Reading
1200A	1% of Reading
Phase Shift (1000A Range) 20A	5°
50A	3°
200A	1.5°
1000A	1°
1200A	1°
Overload	1200A for 30 min ON, 15 min OFF
Frequency Range	30Hz to 5kHz; current derating above 1kHz using the formula: 1000A x 1/F (in kHz)
Load Impedance	0.4Ω max
Working/Common Mode Voltage	600V Cat. III
Output Termination	Jack
MECHANICAL	
Operating Temperature	-14° to 122°F (-10° to 50°C)
Storage Temperature	-4° to 158°F (-20° to 70°C)
Operating Relative Humidity	0 to 85% @ 35°C
Jaw Opening	2.25" (57mm) max
Maximum Conductor Size	2.05" (52mm)
Maximum Bus Bar Size	One 1.95 x 0.19" (50 x 5mm)
Dimensions	4.37 x 8.50 x 1.77" (111 x 216 x 45mm)
Weight	1.21 lbs (550g)
Polycarbonate Material	Handles: Polycarbonate + ABS, Gray, UL94 V0. Jaws: Polycarbonate, Red, UL94 V0
SAFETY	
Electrical	EN 61010-2-032
UL Approval	Yes – Canada and United States
Double Insulation ⧈	Yes
CE Mark	Yes

Note: Reference conditions: 23 ± 3°K, 20 to 75% RH, 48 to 65Hz, external magnetic field <40A/m, no DC component, no external current carrying conductor, test sample centered. Load impedance 0.2Ω @ lead <40mΩ for 250A range.

**Diode Protection for open secondary (Output)*

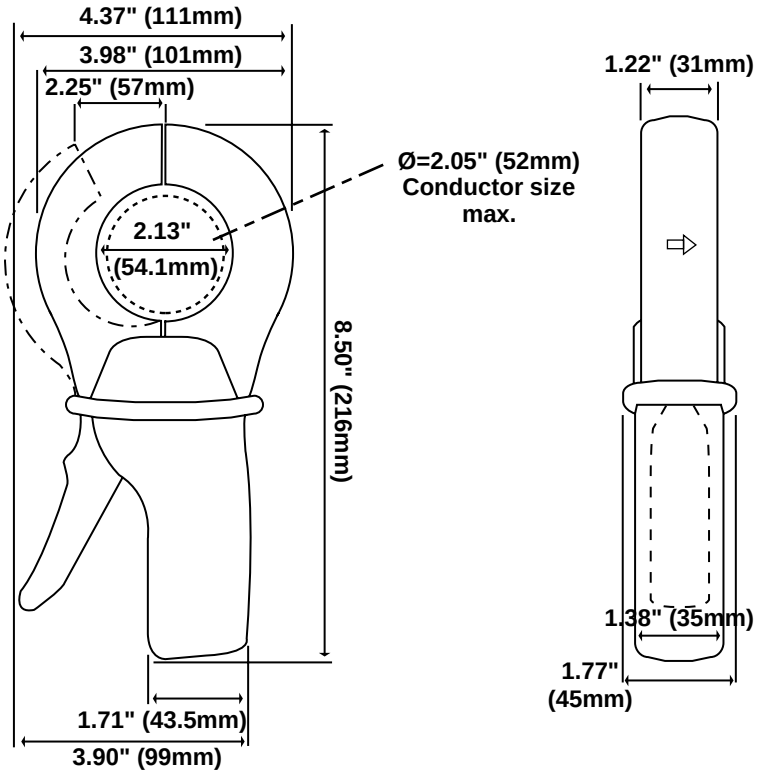

Jacks:
Two standard safety banana jacks (4mm)

ORDERING INFORMATION	CATALOG NO.
AC Current Probe Model SR634 (Jack – 5mA/A – 250A max; 10mA/A – 500 max; 20mA/A – 1000A max) . . .	**Cat. #2113.48**
Includes a user manual	
Accessories (Optional)	
Banana (Female) – BNC (Male) Adaptor	Cat. #2118.46